Exproded View
分解図

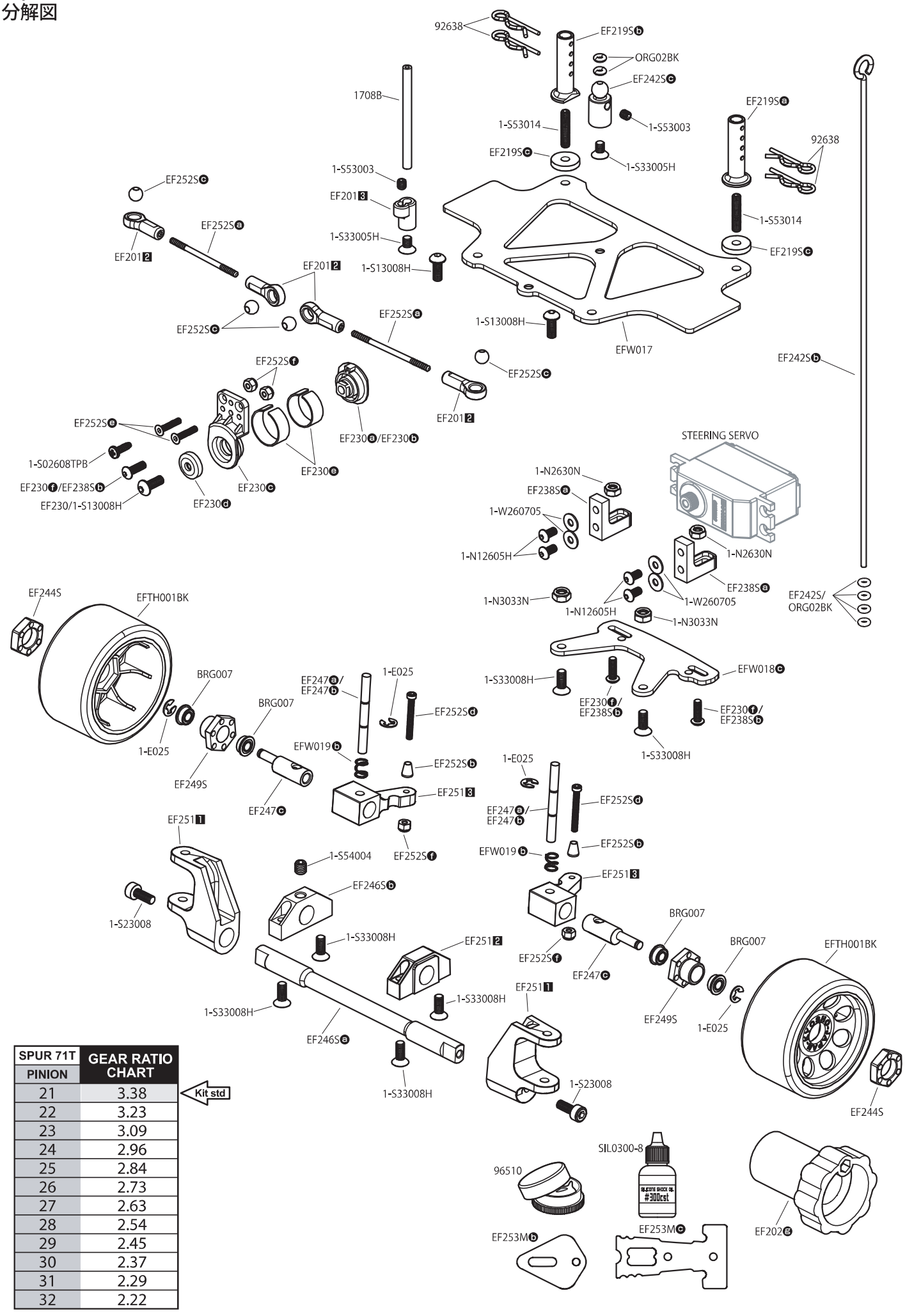

SPUR 71T PINION	GEAR RATIO CHART
21	3.38
22	3.23
23	3.09
24	2.96
25	2.84
26	2.73
27	2.63
28	2.54
29	2.45
30	2.37
31	2.29
32	2.22

Kit std

© Copyright 2024 KYOSHO CORPORATION / 禁無断転載複製

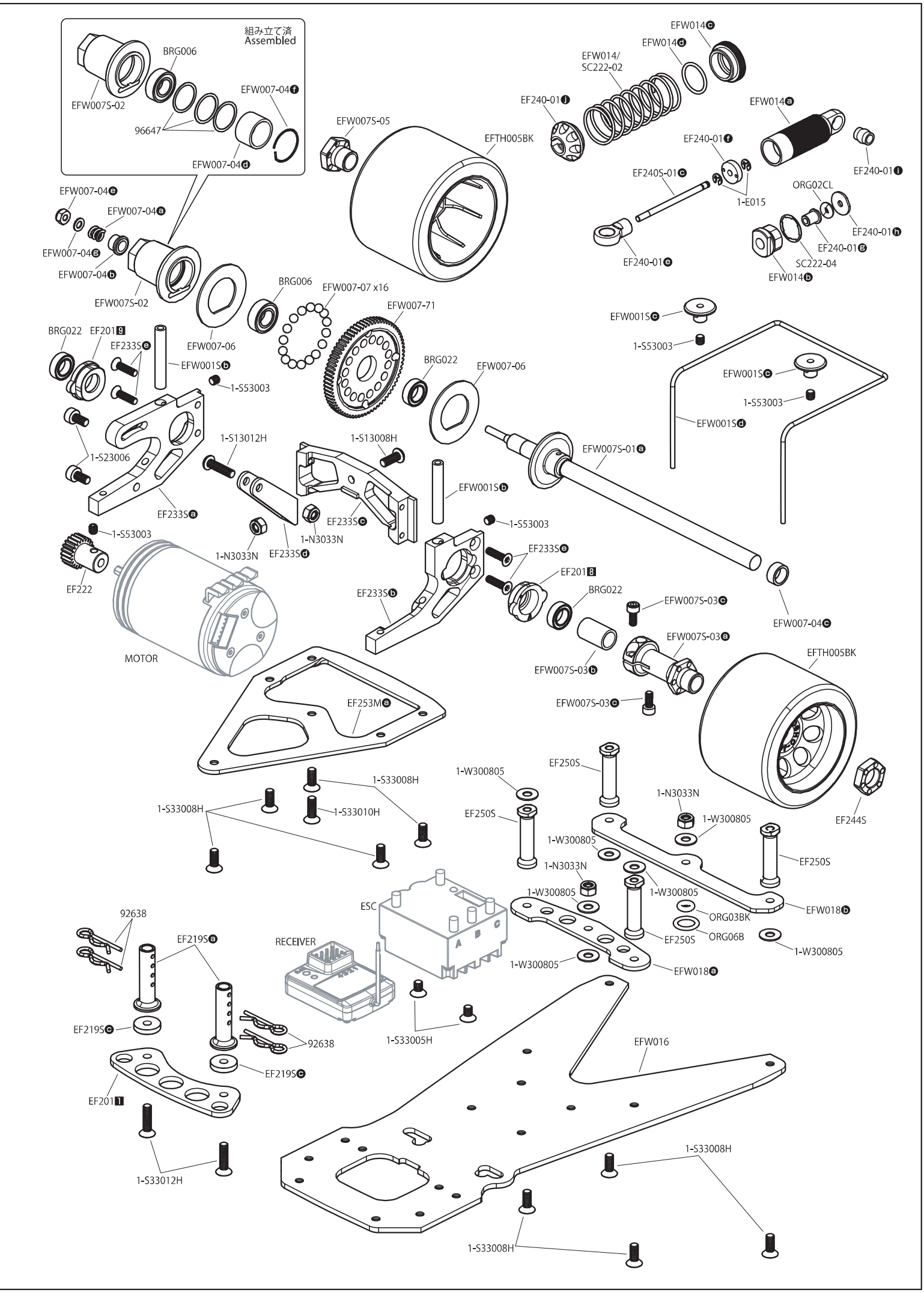
組み立て済
Assembled
BRG006
EFW007S-02
EFW007-04f
96647
EFW007-04d
EFW007-04e
EFW007-04a
EFW007-04c
EFW007-04b
EFW007S-02
EFW007-06
BRG006
EFW007-07 x16
EFW007-71
BRG022
EF201 9
EF233Se
EFW001Sb
1-S53003
1-S23006
EF233Sa
1-S13012H
1-S13008H
EF233Sc
1-N3033N
EF233Sd
1-N3033N
1-S53003
EF222
MOTOR
EFW001Sb
1-S53003
EF233Se
EF201 8
BRG022
EF233Sb
EFW007S-03c
EFW007S-03a
EFW007S-03b
EFW007S-03c
EFW007-04c
EFW007S-01a
EFW001Sc
1-S53003
EFW001Sc
1-S53003
EFW001Sd
EFW014c
EFW014d
EFW014/
SC222-02
EF240-01j
EFW014a
EFW007S-05
EFTH005BK
EF240-01f
EF240-01l
EF240S-01c
1-E015
ORG02CL
EF240-01h
EF240-01e
EF240-01e
SC222-04
EFW014b
EFTH005BK
EF244S
EF253Ma
1-S33008H
1-S33010H
1-S33008H
1-W300805
EF250S
EF250S
1-N3033N
1-W300805
1-W300805
EF250S
1-N3033N
1-W300805
1-W300805
ORG03BK
ORG06B
EF250S
EFW018b
1-W300805
1-W300805
EFW018a
ESC
RECEIVER
92638
EF219Sa
EF219Sc
92638
EF219Sc
1-S33005H
EFW016
EF201 1
1-S33012H
1-S33008H
1-S33008H