Exproded View
分解図

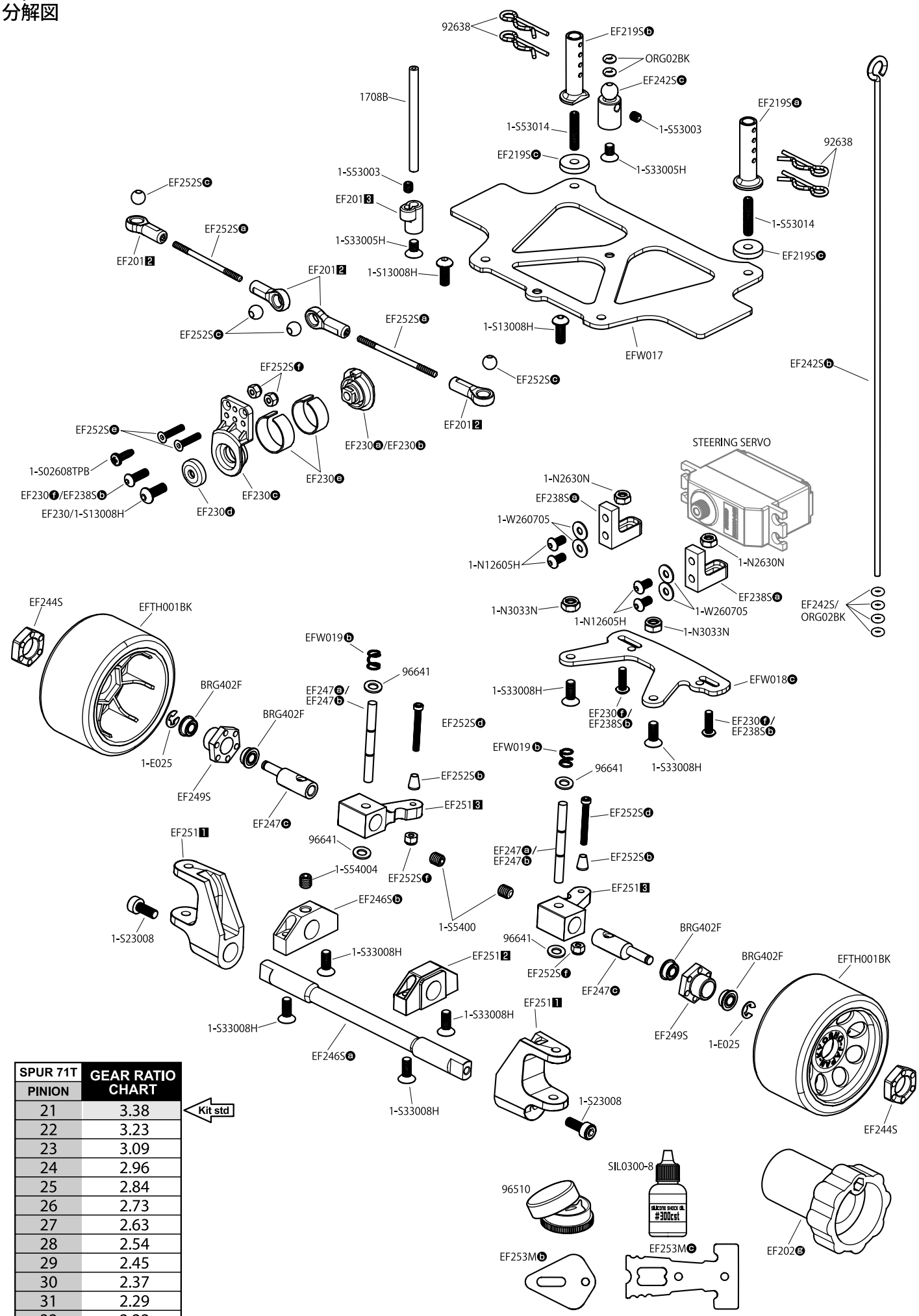

SPUR 71T / PINION	GEAR RATIO CHART
21	3.38
22	3.23
23	3.09
24	2.96
25	2.84
26	2.73
27	2.63
28	2.54
29	2.45
30	2.37
31	2.29
32	2.22

Kit std

© Copyright 2025 KYOSHO CORPORATION / 禁無断転載複製

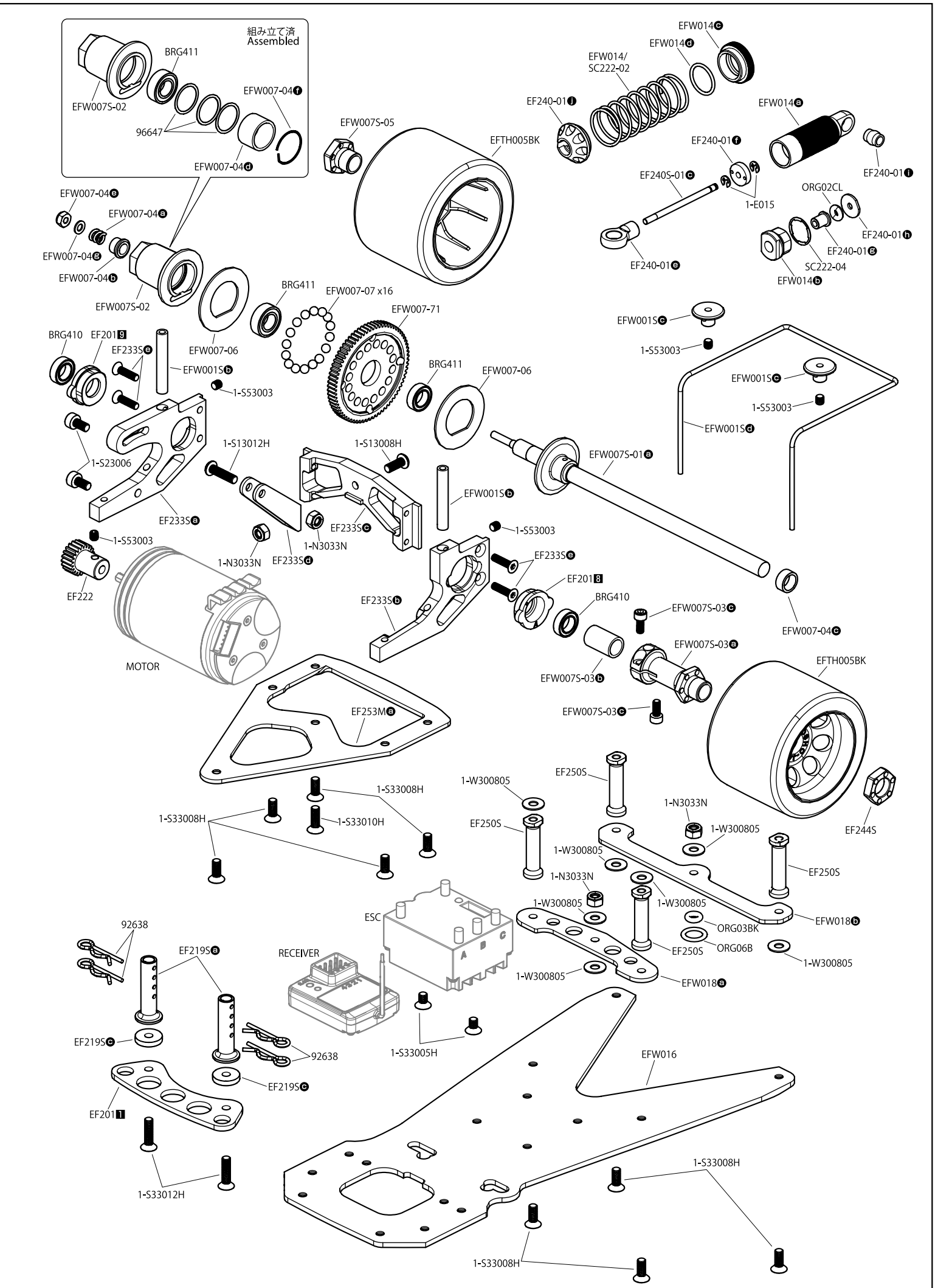
組み立て済
Assembled
BRG411
EFW007S-02
EFW007-04f
96647
EFW007-04d
EFW007-04e
EFW007-04a
EFW007-04g
EFW007-04b
EFW007S-02
EFW007-06
BRG411
EFW007-07 x16
EFW007-71
BRG410
EF201 9
EF233Se
EFW001Sb
1-S53003
1-S23006
EF233Sa
1-S13012H
1-S13008H
EF233Sc
1-N3033N
EF233Sd
1-N3033N
1-S53003
EF222
MOTOR
EFW007-05
EFTH005BK
EFW014c
EFW014d
EFW014/
SC222-02
EF240-01j
EFW014a
EF240-01f
EF240S-01c
1-E015
EF240-01i
ORG02CL
EF240-01h
EF240-01g
SC222-04
EFW014b
EF240-01e
EFW001Sc
1-S53003
EFW001Sc
1-S53003
EFW001Sd
BRG411
EFW007-06
EFW007S-01a
EFW001Sb
1-S53003
EF233Se
EF201 8
BRG410
EF233Sb
EFW007S-03c
EFW007-04c
EFW007S-03a
EFW007S-03b
EFW007S-03c
EFTH005BK
EF244S
EF253Ma
1-S33008H
1-S33010H
1-S33008H
1-W300805
EF250S
EF250S
1-N3033N
1-W300805
1-W300805
EF250S
1-N3033N
1-W300805
1-W300805
ORG03BK
ORG06B
EF250S
EFW018b
1-W300805
1-W300805
EFW018a
ESC
RECEIVER
92638
EF219Sa
EF219Sc
92638
EF219Sc
EF201 1
1-S33005H
EFW016
1-S33012H
1-S33008H
1-S33008H