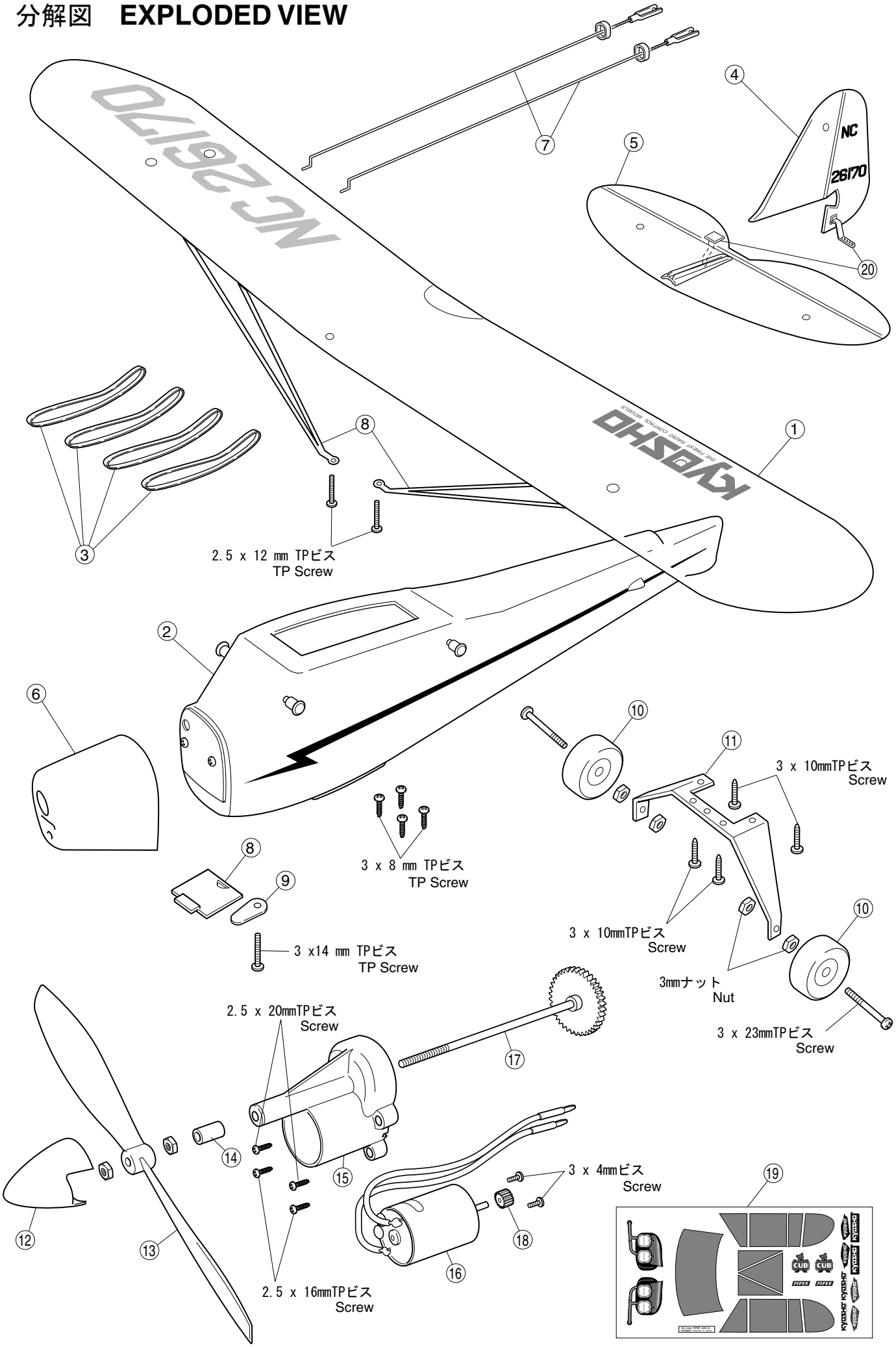分解図　EXPLODED VIEW